SCHREMPP electronic

OPERATING AND INSTALLATION INSTRUCTIONS

AL-20-60-R / AL-20-60-RD



CE

Keep for future reference!

Schrempp electronic GmbH
Wiesenstrasse 5
D-65843 Sulzbach/Ts.

Phone +49 6196 802399-0
Fax +49 6196 802399-9
Email main@schrempp-electronic.de
Website www.schrempp-electronic.de

LED Workstation Light:	AL-20-60-R / 11124 / GTIN 4262388141614 AL-20-60-RD: 11126 / GTIN 4262388141621
Lot number:	See nameplate
Year of manufacture:	See nameplate
Version of the Operating and Installation Manual:	01
Date of issue of the Operating and Installation Instructions :	27.10.2026

Product Changes

Year	Type	Changes
2026	See above	New edition

Revisions to the document

Date	Version	Changes
27.10.2026	01	Update in accordance with EN IEC 63000:2018

Approvals

This document requires the following approvals:

Name	Title
Wolfram Schrempp	Management

© 2025 Schrempp electronic GmbH

This Operating and Installation Manual and all illustrations contained therein are protected by copyright. Any use beyond the limits of copyright law is prohibited without the prior written consent of the publisher and is punishable by law. This applies specifically to reproductions, translations, microfilming, storage, and processing in electronic systems. For permission requests, please contact the publisher.

Table of Contents

Table of Contents **3**

List of Figures **6**

1 Introduction **7**
- 1.1 Presentation Methods 8
  - 1.1.1 Section-Specific Warnings 8
  - 1.1.2 Embedded warnings 9
  - 1.1.3 Other Presentation Methods 9
  - 1.1.4 Symbols Used in the Operating and Installation Instructions 9
- 1.2 Warranty and Liability 11
- 1.3 Copyright 12
- 1.4 Warranty Terms 12
- 1.5 Service/Customer Service 13

2 Safety **14**
- 2.1 Intended Use 14
  - 2.1.1 Note on Installing the LED Workstation Light 15
  - 2.1.2 Modifications to the LED Workstation Light 16
  - 2.1.3 Foreseeable Misuse 17
- 2.2 Personnel Requirements 17
  - 2.2.1 Personnel Requiring Training 17
  - 2.2.2 Personnel Who Have Received Instruction 18
  - 2.2.3 Qualified personnel 18
  - 2.2.4 Certified Electrician 18
  - 2.2.5 Responsibilities 18
  - 2.2.6 Staff Obligations 19
  - 2.2.7 Unauthorized Persons 19
- 2.3 Basic Safety Instructions 19
- 2.4 Safety Measures for Environmental Protection 19
- 2.5 Special Hazard Warnings/Residual Hazards 20
  - 2.5.1 Symbols Used on the LED Workstation Light 20
  - 2.5.2 Hazards Associated with Electrical Energy 22
  - 2.5.3 Warning: Incorrect Power Supply 23
  - 2.5.4 Warning: Unsuitable Power Supply 23
  - 2.5.5 Warning: Insufficient Protection Rating 24
  - 2.5.6 Hazard due to insufficient insulation requirements 24
  - 2.5.7 Hazard due to incorrect application 24
  - 2.5.8 Warning: Incorrect Safety Assumptions 24
  - 2.5.9 Warning: Falling Parts During Assembly 25
  - 2.5.10 Caution: Thermal hazard 25
  - 2.5.11 Caution: Optical radiation 26
  - 2.5.12 Tripping hazards 26
  - 2.5.13 Hazards from Using Incorrect Replacement Parts 26
  - 2.5.14 Hazards due to insufficient training 26
  - 2.5.15 Hazards from cleaning fluids 27

2.5.16 Note on environmental influences ... 27
2.5.17 Note on ESD hazards ... 27
2.5.18 Warning regarding EMC hazards ... 27
2.5.19 Warning regarding mechanical stress ... 28
2.5.20 Note on chemical exposure and cleaning ... 28
2.5.21 Warning regarding installation errors ... 28
2.6 Personal Protective Equipment ... 29
2.7 Emergency Instructions ... 30
2.8 Operator's Responsibilities ... 30

3 Description of the LED workstation light ... 31
3.1 Functional description ... 31
3.1.1 General Information ... 31
3.1.2 Optical Properties ... 31
3.1.3 Electrical Connection ... 31
3.1.4 Safety Features ... 31
3.2 Typical Applications ... 32
3.3 Technical Specifications ... 32
3.3.1 Dimensions ... 34

4 Transport and Storage ... 35
4.1 Delivery by an authorized shipping company ... 35
4.2 Inspection upon receipt by the recipient ... 35
4.3 Packaging ... 35
4.3.1 Unpacking ... 36
4.3.2 Repackaging ... 36
4.4 Warnings regarding hazards during transport ... 36
4.5 Scope of Delivery: LED Workstation Light ... 37
4.6 Temporary Storage ... 37

5 Installation ... 37
5.1 Pre-assembly by Schrempp electronic GmbH ... 37
5.2 Safety Precautions During Installation ... 38
5.3 Preparatory Measures ... 39
5.3.1 General ... 39
5.3.2 Preparatory Steps for the Electrical System ... 39
5.4 Installing the LED Workstation Light ... 40
5.4.1 Mechanical Mounting ... 41
5.4.2 Electrical Connection ... 41
5.4.3 Installation Instructions ... 41

6 Commissioning ... 42
6.1 Safety Precautions Before Commissioning ... 42
6.2 Connection of AL-20-60-R / ... 42

7 Troubleshooting ... 43
7.1 Remedial Measures ... 43

8 Maintenance and Cleaning ... 44
8.1 Safety Precautions During Maintenance ... 44
8.1.1 General Safety Precautions for Maintenance Work ... 44
8.2 Inspection and Maintenance ... 45

8.2.1 Maintenance Intervals 45
8.2.2 Preparatory Measures for Electrical Systems 45
8.2.3 Maintenance—Monthly 46
8.2.4 Maintenance—Annual 46
8.2.5 Replacement of Components 47

9 Take Out of Service and Disassemble 47
9.1 Disposal 48

10 Appendix 48
10.1 EU Declaration of Conformity 48

List of Figures

Figure 1: Dimensions 34

1 Introduction

These Operation and Installation Instructions provide you with all the information you need for the smooth operation of the LED workstation light .

The Operation and Installation Manual must be read, understood, and followed by all persons responsible for the assembly/installation, transport, commissioning, operation, maintenance, cleaning, troubleshooting, decommissioning, disassembly, and disposal of the LED workstation light . This applies in particular to the safety instructions listed.

After reviewing the Operating and Installation Manual , you will be able to:

- transport the LED work lamp in accordance with safety regulations,
- assemble/install the LED work lamp ( ) in accordance with safety guidelines,
- put the LED work lamp into service in a safe manner,
- Operate the LED worklight in accordance with safety regulations,
- take the appropriate action if a malfunction occurs,
- maintain the LED worklight in accordance with the instructions,
- clean the LED workstation light in accordance with the instructions,
- decommission the LED work lamp in accordance with safety regulations,
- dismantle the LED work lamp in a safe manner,
- dispose of the LED worklight in accordance with regulations.

In addition to the , generally applicable, statutory, and other binding regulations regarding accident prevention and environmental protection in the country of use must be observed.

1.1 Illustrations

To provide guidance and direct warnings of hazards, text passages requiring special attention in this Operating and Installation Manual for the are marked as follows:

1.1.1 Section-Specific Warnings

Section-specific warnings apply not only to a specific action, but to all actions within a section.

Structure

⚠ SIGNAL WORD



Symbol providing further explanation of the hazard

Type and source of the hazard!

Possible consequence(s) of non-compliance!

► Measures to prevent the hazard.

Hazard levels

⚠ DANGER

A hazard with a high degree of risk that, if not avoided, will result in death or serious bodily injury.

⚠ WARNING

A hazard with a moderate level of risk that, if not avoided, may result in death or serious bodily injury.

⚠ CAUTION

A hazard with a low level of risk that, if not avoided, may result in minor or moderate bodily injury.

NOTE

A hazard with a low level of risk that, if not avoided, may result in property damage.

1.1.2 Embedded warnings

Embedded warnings apply to specific actions and are directly integrated into the action.

Structure

⚠ **SIGNAL WORD:** Type and source of the hazard

Possible consequences of non-compliance

► Measures to Avoid the Hazard

Hazard Levels

– ⚠ **DANGER/WARNING/CAUTION**

– ***NOTE*** (without warning triangle)

1.1.3 Other Symbols

The info symbol provides useful information.

– Text following this symbol is a list.

► Text that follows this symbol describes measures in warnings and steps to take.

a) Text that follows this symbol describes actions that must be performed in the specified order.

“ ” Text in quotation marks refers to other chapters or sections.

1.1.4 Symbols Used in the Operating and Installation Instructions

In warning notices, specific hazards are additionally identified as follows:

Symbol	Description
	Warning symbol
	**Warning: Risk of Hand Injuries** This symbol warns of hand injuries.
	**Warning: Obstacles on the Floor** This symbol warns of tripping hazards caused by obstacles on the floor.
	**Warning: Suspended Load** This symbol warns of hazards when standing under suspended loads.
	**Warning: Electrical Voltage** This symbol warns of hazards caused by electrical voltage.

Symbol	Description
	**Warning: Components Sensitive to Electrostatic Discharge** This symbol warns of components that can be damaged by electrostatic discharge (ESD).
	**Warning: Hot Surface** This symbol warns of the risk of burns from hot surfaces.
Mandatory symbols	
	**Follow the** This symbol indicates that you must follow the Operating and Installation Instructions .
	**Wear safety shoes** This symbol indicates that safety shoes must be worn in the work area.
	**Use hand protection** This symbol indicates that hand protection must be worn in the work area.
	**Wear protective work clothing** This symbol indicates that protective work clothing must be worn in the work area.
	**Wear head protection** This symbol indicates that head protection must be worn in the work area.
Hazard symbols	
	**Warning: Substances Hazardous to the Environment** This symbol warns of substances hazardous to the environment.
	**Danger - Caution/Systemic Health Hazard** This symbol warns of a systemic health hazard if inhaled or swallowed.
	**Danger - Caution: Toxic (harmful to health)/Corrosive or irritating/Minor systemic health hazard** This symbol warns of substances harmful to health.

Symbol	Description
	Other symbols
	**Disposal Instructions** This symbol indicates that the labeled product must not be disposed of with household waste.
	**Recycling** This symbol indicates that various materials should be returned to the recycling cycle.
	**Qualified Electrician Required** This symbol indicates tasks that may only be performed by a qualified electrician.
	**Mechanical technician required** This symbol indicates tasks that may only be performed by a qualified mechanic.
	**CE marking** CE marking: Product complies with essential EU requirements.
	**Limited surface temperature DIN EN 60598-2-24:2014-04** For luminaires bearing this marking, the temperature on all surfaces of the luminaire that are exposed to dust accumulation must not exceed 90°C.
	**Electrical Safety Class II (Protective Insulation)** Equipment that features reinforced or double insulation. It provides protection against electric shock without relying on a protective conductor (grounding).

1.2 Warranty and Liability

The obligations agreed upon in the sales contract, the General Terms and Conditions, the delivery terms for the , and the legal regulations in effect at the time the contract was concluded apply.

All information and instructions in these Operating and Installation Instructions have been compiled in accordance with applicable standards and regulations, the state of the art, and our many years of knowledge and experience.

These Operating and Installation Instructions for the are not intended as a substitute for determining the suitability or reliability of the for specific user applications and must not be used to determine its suitability or reliability.

The LED worklight may only be used for the applications described by the manufacturer. All other applications are improper and are considered dangerous. The manufacturer cannot be held liable for damages resulting from defects, or from unintentional or improper use of the LED worklight .

Warranty and liability claims for personal injury or property damage are excluded if they are attributable to one or more of the following causes:

- Use of the LED worklight that is not in accordance with its intended purpose or is improper,
- improper transport, assembly/installation, commissioning, operation, troubleshooting, maintenance/cleaning, decommissioning, disassembly, and disposal of the LED workstation light,
- operating the LED workstation light with a defective or open housing,
- Failure to follow the operating and installation instructions as well as the instructions in the operating and installation instructions regarding assembly, commissioning, operation, maintenance, and cleaning of the LED workstation light ,
- Use of unqualified or untrained personnel,
- Structural modifications to the (Modifications or other alterations to the LED workstation light must not be made without prior written approval from Schrempp electronic GmbH . Failure to comply will render the LED workstation light unsuitable for use.),
- improperly performed repairs,
- use of unauthorized replacement parts or use of replacement parts that do not meet the specified technical requirements,
- disasters, impact from foreign objects, and force majeure.

Furthermore, Schrempp electronic GmbH reserves the right to revise this publication at any time due to technical changes made to improve performance and further development, without any obligation to inform others of such revisions.

1.3 Copyright

These operating and installation instructions, including all illustrations, are protected by copyright and are intended exclusively for internal use.

Any disclosure to third parties, duplication, translation, reproduction, electronic or photographic archiving, modification, or other use or communication of the content is prohibited without the prior written consent of Schrempp electronic GmbH. Violations will result in liability for damages; we reserve the right to assert further claims.

We reserve the right to make any changes necessary to advance the technology.

1.4 Warranty Provisions

The warranty provisions are contained in the General Terms and Conditions of .

1.5 Service/Customer Support



Our customer service department is available to provide technical information:

Phone: +49 6196 802399-0

In addition, our employees are constantly interested in new information and insights gained from product use that may be valuable for improving our products.

2 Safety

⚠ WARNING



Failure to observe the following safety instructions can have serious consequences:

Risk of injury to persons due to electrical, mechanical, or chemical hazards; failure of critical functions; and environmental damage!

- ► Carefully read the safety and hazard warnings listed in this section before putting the LED workstation light into operation.
- ► In addition to the instructions in this operating and installation manual, also observe the generally applicable safety and accident prevention regulations.
- ► In addition to the instructions in this operating and installation manual, observe the applicable national labor, operational, and safety regulations. Also comply with any existing internal plant regulations.

2.1 Intended Use

The operational safety of the is guaranteed only if it is used as intended.

The worklight is intended exclusively for illuminating industrial machines, devices, or systems Installation may only be performed by trained specialists in control and automation technology who are familiar with the applicable national, regional, and local safety and accident prevention regulations.

The LED worklight must be used exclusively within the limits of its technical specifications. Intended use also includes compliance with the technical specifications, adherence to the operating and installation instructions, compliance with maintenance and servicing regulations, and compliance with applicable national safety, occupational safety, and accident prevention regulations. Any operation beyond these limits is considered improper use.

The specified maximum technical parameters must not be exceeded. The devices are suitable for use indoors and in protected outdoor areas within the scope of the specified protection class and are intended solely for permanent installation. The LED workstation lights are not intended for installation in aircraft or spacecraft or for any use other than those listed here, and such use is considered improper. In particular, it is prohibited to:

- use defective or unsuitable accessories,
- to operate the LED worklight in a potentially explosive atmosphere,
- to operate the LED worklight if it is not ready for use or has been modified,
- Place objects on the LED worklight . Remove all objects from the LED worklight ,
- operate the LED work lamp if the housing is damaged,

- For lights, the temperature on all surfaces of the light that are exposed to dust accumulation must not exceed 90°C.
- Open the LED work lamp for maintenance work.
- Operate the LED worklight if the safety and warning labels have been removed or are illegible,
- Operate the LED worklight if it has been installed incorrectly. Incorrect installation of the mechanical or electrical connections can result in personal injury or property damage,
- operating the LED work light if the cables are damaged. Damage to the cables can result in personal injury and property damage,
- operating the LED workstation light if the vibration and temperature limits are not observed. Failure to observe the vibration and temperature limits can result in personal injury and property damage,
- failing to store and transport the LED worklight in accordance with the manufacturer's specifications. Improper storage and transport can result in personal injury and property damage.

Intended use also includes:

- Following all instructions in the operating and installation manual,
- adhering to the inspection intervals in accordance with the applicable Machinery Directives, if any
- using operating materials and consumables in accordance with applicable safety regulations,
- compliance with national, regional, and local safety and accident prevention regulations,
- compliance with the operating conditions,

The technical specifications listed in the technical data must be adhered to without exception.



► Use the LED workstation light only as intended; otherwise, safe operation cannot be guaranteed.

► Follow the instructions on the nameplate.

The operator of the LED worklight —not the manufacturer—is responsible for any personal injury or property damage resulting from improper use!

2.1.1 Note on Installing the LED Workstation Light

Installation must be performed exclusively by trained specialists in control and automation technology who are familiar with the applicable national, regional, and local safety and accident prevention regulations.

The LED workstation light is intended for installation in a machine, system, or device; therefore, the control system is specified by the machine, system, or device or is built into it.

The LED worklight may only be put into service once it has been determined that the machine, system, or device into which the LED worklight is to be installed complies with all safety requirements of the Machinery Directive 2006/42/EC and other applicable directives and standards.

It is the responsibility of the manufacturer or distributor to conduct an appropriate and comprehensive risk assessment, evaluation, and testing of the with regard to its specific application or use.

In emergencies, it is recommended to follow and apply the procedures outlined in the operating and maintenance manual for the machine, system, or device on which the LED worklight is installed.

► During maintenance work, secure the LED worklight against unexpected restarting of the machine, system, or device in which the LED worklight is installed.

2.1.2 Structural modifications to the LED worklight

Design and manufacturer approval are based on the General Product Safety Regulation. Without prior written approval from Schrempp electronic GmbH , no modifications, additions, or alterations may be made to the LED worklight .

Failure to comply will render the LED workstation light unsuitable for use. The manufacturer of the LED workstation light is hereby released from any warranty obligations.

Replace any devices that are not in perfect working order immediately.

Use only original replacement parts, wear parts, and accessories. These parts are specifically designed for the LED worklight . For parts sourced from third parties, there is no guarantee that they are designed and manufactured to meet the required performance and safety standards.

Parts and optional accessories not supplied by Schrempp electronic GmbH are not approved for use with the LED workstation light .

2.1.3 Foreseeable Misuse

Any use of the LED workstation light that goes beyond its intended purpose and/or is otherwise improper may result in serious injury.

- ► Use the LED worklight only as intended.
- ► Use the LED worklight only if it has been properly maintained and inspected.
- ► Do not use the LED worklight outside the environmental conditions (temperature, humidity, protection rating) specified in the Technical Data section.
- ► For lights bearing this symbol, the temperature on all surfaces of the light that are exposed to dust accumulation must not exceed 90°C.
- ► Do not operate the LED worklight without proper, secure mounting or with loose mounting hardware.
- ► Do not connect the LED worklight to a power supply that does not meet the specifications. When used in North America (U.S./Canada), use only a 24V / Class 2 power supply.
- ► Do not operate the LED worklight in potentially explosive atmospheres unless it has the appropriate ATEX certification.
- ► Do not look directly at the illuminated LED surface from a close distance.
- ► Do not change or tamper with the factory settings if doing so alters the defined signal meaning.
- ► Do not perform unauthorized repairs, modifications, or alterations on the LED worklight .

2.2 Personnel Requirements

The LED workstation light may only be transported, assembled, installed, commissioned, maintained, cleaned, repaired, decommissioned, inspected, disassembled, or disposed of by persons who are qualified and/or trained to do so. If the personnel in question do not already possess the necessary knowledge and skills, appropriate training and instruction must be provided. All local regulations must be followed.

These individuals must be familiar with the Operating and Installation Manual and act in accordance with it. The respective authorizations of the personnel must be clearly defined.

Persons with limited physical, sensory, or mental abilities, or who lack experience and knowledge, must be supervised or instructed in the safe use of the LED workstation light and must understand the associated hazards.

The " " () lists the following qualifications for various areas of work:

2.2.1 Personnel Requiring Training

Personnel requiring training, such as apprentices or temporary workers, are not aware of all the hazards that may arise during operation of the LED workstation light . They may only perform work on the LED workstation light under the supervision of qualified or trained personnel.

2.2.2 Trained Personnel

Trained personnel have received instruction from the operator or from qualified personnel regarding the tasks assigned to them and the potential hazards associated with improper behavior.

2.2.3 Qualified Personnel

Qualified personnel, based on their technical training, knowledge, and experience, as well as their familiarity with the relevant regulations, are capable of performing the tasks assigned to them and of independently identifying and avoiding potential hazards.

2.2.4 Certified Electrician

A qualified electrician is capable, based on their technical training, knowledge, and experience, as well as their knowledge of the relevant standards and regulations, of performing work on electrical equipment and independently identifying and avoiding potential hazards.

The qualified electrician is trained for the specific work site where they are employed and is familiar with the relevant standards and regulations.

2.2.5 Responsibilities

Improper handling can result in significant personal injury and property damage.

- Only personnel who can be expected to perform their work reliably are authorized to work on this equipment. No one whose reaction time is impaired by drugs, alcohol, medication, or similar substances may install or connect the .
- All persons performing work on the LED workstation light must read the operating and installation instructions and confirm with their signature that they have understood them.
- Trainees may initially perform work on the LED workstation light only under the supervision of qualified personnel. Completion and successful completion of training must be confirmed in writing.

► Observe the personnel requirements for the various operating phases/modes.

Personnel Requirements	Operating Phase/Mode
Qualified technical personnel, certified electrician	Transport, installation, commissioning, troubleshooting, maintenance, decommissioning, disassembly, disposal

The operator is responsible for training the personnel.

2.2.6 Personnel Responsibilities

All persons tasked with the installation and commissioning of the agree, prior to commencing their work, to:

- To observe the basic regulations on occupational safety and accident prevention,
- to read the safety instructions and warnings in this Operating and Installation Manual and to confirm with their signature that they have understood them.

2.2.7 Unauthorized Persons

Unauthorized persons who do not meet the qualification requirements for personnel are not aware of the hazards in the work area.

- ► Keep unauthorized persons away from the work area.
- ► If in doubt, approach these individuals and direct them to leave the work area.
- ► Stop work as long as unauthorized persons are in the work area.

2.3 Basic Safety Instructions

- ► The LED worklight must not be put into operation or serviced until you have read these operating and installation instructions.
- ► Use the LED worklight only as intended.
- ► When operating the LED worklight , avoid any practices that compromise the safety of persons or the LED worklight .
- ► Always keep the area where the LED work lamp is used clean and tidy.
- ► Operate the LED work lamp only within its technical specifications.
- ► Keep all safety and hazard warnings on the LED work lamp legible and replace them as needed.
- ► Work on the LED work lamp may only be performed by qualified or trained personnel.
- ► If malfunctions occur, take the LED workstation light out of service immediately.
- ► It must be ensured that all persons performing work on the LED workstation light have access to the Operating and Installation Instructions at all times.

2.4 Safety Measures for Environmental Protection

- ► Comply with regulations regarding waste prevention and proper waste recycling or disposal during all work.

2.5 Special Hazard Warnings/Residual Hazards

2.5.1 Symbols Used on the LED Workstation Light

Symbol	Description	Location
	**Warning: Electrical Voltage** This symbol warns of hazards caused by electrical voltage.	Quick Guide, User Manual
	**Warning: Components Sensitive to Electrostatic Discharge** This symbol warns of components that can be damaged by electrostatic discharge (ESD).	Quick Guide, User Manual
	**Warning: Hot Surface** This symbol warns of the risk of burns from hot surfaces.	Quick Guide, User Manual
Mandatory Signs		
	**Follow the operating and installation instructions at** This symbol indicates that you must follow the Operating and Installation Instructions .	Quick Guide, User Manual
Other Symbols		
	**Disposal Instructions** This symbol indicates that the marked product must not be disposed of with household waste.	Nameplate
	**CE Marking** CE Marking: The product complies with essential EU requirements.	Nameplate
	**Limited Surface Temperature** For luminaires bearing this marking, the temperature on all surfaces of the luminaire that are exposed to dust accumulation must not exceed 90°C.	Nameplate
	**Electrical Safety Class II (Protective Insulation)** Equipment featuring reinforced or double insulation. It provides protection against electric shock without relying on a protective conductor (grounding).	Nameplate



► Keep all safety and hazard warnings on the LED worklight legible. Replace the warnings as needed.

2.5.2 Hazards from Electrical Energy

DANGER



Touching live parts poses a risk of electric shock!

Failure to comply may result in death or serious injury!

- ► Always keep electrical components enclosed.
- ► Have work on electrical equipment performed only by a qualified electrician who is specifically trained to work on electrical equipment and can identify and avoid hazards.
- ► Disconnect the power supply on all poles before performing any work and verify that the system is de-energized.
- ► Installation in accordance with DIN VDE 100-100 “Operation of Electrical Installations”
- ► Follow the five safety rules:
  1. Disconnect the power supply.
  2. Secure against accidental re-energization.
  3. Verify that the circuit is de-energized.
  4. Ground and short-circuit.
  5. Cover or cordon off live parts.

DANGER



In the event of an electric shock, there is a risk of secondary accidents caused by startle reactions (e.g., falling)!

Failure to comply can result in death or serious injury!

- ► Follow the five safety rules when working on electrical equipment.
- ► Have work on electrical equipment performed only by a qualified electrician.

- ► Before working on electrical equipment, de-energize the LED worklight and secure it against accidental re-energization.
- ► Have work on electrical equipment performed only by a qualified electrician—e.g., a plant electrician.
- ► Inspect the electrical equipment regularly for defects such as loose connections or scorched cables. Have any defects repaired immediately.
- ► Have the electrical equipment and fixed electrical installations inspected by a qualified electrician at least every 4 years. Fixed electrical installations are permanently installed equipment or equipment that lacks a carrying device and is so large that it cannot be easily moved. This also includes electrical equipment that is temporarily fixed in place and operated via movable connection cables.
- ► Have portable electrical equipment, connection cords with plugs, and extension and connection cords with their connectors inspected by a qualified electrician at least every 6 months, provided they are in use. Equipment is considered portable if, by its nature and customary use, it can be moved while energized.
- ► Any modifications made to electrical equipment after the inspection must comply with currently valid standards and guidelines.
- ► Always keep all enclosures containing electrical equipment closed.
- ► Repair or replace damaged enclosures and cables immediately.
- ► If leakage currents exceed 10 mA, additional measures must be taken (grounding).

2.5.3 Warning: Incorrect Power Supply

⚠ WARNING



There is a risk of short circuit or overload!

Failure to comply may result in equipment damage or fire!

- ► Use only voltage ranges and power ratings in accordance with the device specifications.
- ► Provide a suitable upstream fuse or current monitoring

2.5.4 Warning: Unsuitable Power Supply

⚠ WARNING



Non-compliant power supplies pose a hazard!

Failure to comply may result in an overload or fire hazard!

- ► Use only Class 2 power supplies for use in North America (U.S./Canada).

2.5.5 Warning: Insufficient Protection Rating

⚠ WARNING

There is a risk due to insufficient protection against dust or moisture!

Failure to comply may result in equipment failure!

► Observe the operating limits and the specified protection rating.

2.5.6 Danger due to inadequate insulation requirements

⚠ DANGER



There is a risk due to insufficient insulation and the danger of electric shock!

Failure to comply may result in electric shock!

► Follow the instructions for the pin assignment and the disconnection procedure.

2.5.7 Danger due to incorrect application

⚠ DANGER

There is a risk if used in hazardous areas without approval!

Failure to comply may result in a risk of explosion!

► Do not use the LED workstation light in potentially explosive atmospheres.

2.5.8 Warning Regarding Incorrect Safety Assumptions

⚠ WARNING

There is a risk due to a false sense of security!

Failure to comply may result in danger!

► Do not use the LED worklight as a safety-critical shut-off component.

2.5.9 Warning: Falling Parts During Installation

⚠ WARNING



Improper installation poses a hazard!

Failure to follow these instructions may result in head, hand, or foot injuries!

- ► Secure the LED worklight only with suitable fasteners and tighten the screws to the specified torque.
- ► Always wear the personal protective equipment required for the task at hand (workwear, protective gloves, hard hat, and safety shoes) while working.
- ► Use fasteners in accordance with the manufacturer's instructions and tighten them to the specified torque.

2.5.10 Caution: Risk of burns

⚠ CAUTION



There is a risk from heated plastic surfaces exceeding 60 °C (DIN EN ISO 13732-1)!

Failure to comply may result in burns!

- ► Pay attention to the permissible ambient temperature and ensure adequate ventilation.
- ► Always wear appropriate protective clothing and gloves when working near hot components. Components that can become hot are marked with the "Warning: Hot Surface" graphic symbol.
- ► Allow the components to cool to ambient temperature before performing maintenance or repair work.

2.5.11 Caution: Optical Radiation

⚠ CAUTION

There is a risk of glare from LEDs!

Failure to observe this warning may result in impaired vision!

► Do not stare directly at the LED surface due to the risk of glare.

2.5.12 Tripping hazards

⚠ CAUTION



Risk of tripping due to improperly installed power supply cables!

Failure to comply may result in injury!

► Always route cables in the utility shaft so they are free of tripping hazards and obstructions.

► Mark unavoidable trip hazards with color-coding.

2.5.13 Hazards from Using Incorrect Replacement Parts

⚠ WARNING

Danger from using incorrect replacement parts!

Incorrect or defective replacement parts can lead to damage, malfunctions, or total failure, and can compromise safety!

► Use only genuine replacement parts.

► Obtain only genuine replacement parts.

2.5.14 Dangers Associated with Insufficient Qualifications

⚠ WARNING



Risk of injury due to insufficient training!

Improper handling of the LED worklight can result in serious personal injury and property damage!

► Have all work performed only by qualified personnel.

2.5.15 Hazards from Cleaning Fluids

⚠ WARNING



The LED worklight poses hazards due to cleaning fluids !

Failure to comply may result in serious injury!

- ► When handling this product, follow the safety guidelines for cleaning fluids that apply to this product.
- ► Always wear the protective equipment required for the task at hand (respiratory protection, protective work clothing, safety goggles, and protective gloves) while working.

2.5.16 Note on Environmental Impacts

NOTE

There is a risk from dust or moisture!

Failure to comply may result in malfunctions!

- ► Operate the LED workstation light only within the specified limits and follow the cleaning instructions.
- ► Do not operate the light in an environment containing corrosive substances such as acids or oils, which can damage and embrittle plastic parts.

2.5.17 Warning: ESD Hazard

NOTE



There is a risk of component damage due to electrostatic discharge!

Failure to comply may result in loss of function!

- ► Follow the ESD guidelines.

2.5.18 EMC Hazard Warning

NOTE

There is a risk due to insufficient emission or immunity to interference!

Failure to comply may result in malfunctions!

- ► Follow the EMC installation instructions and isolate signal lines from sources of interference.

2.5.19 Note on Mechanical Stress

NOTE

There is a risk due to vibration or shock!

Failure to comply may result in loosening or failure!

► Conduct regular inspections of the fasteners.

2.5.20 Note on chemical exposure and cleaning

NOTE

Improper cleaning poses a hazard!

Failure to comply may result in damage to materials and equipment!

► Use only approved cleaning agents. Clean the exterior only with a mild soap solution; do not use solvents or acids.

► Do not use sharp-edged tools for cleaning; in particular, do not scratch the optical diffuser.

► Do not clean with high pressure.

2.5.21 Note on Installation Errors

NOTE

There is a risk due to an incorrect hole pattern or incorrect torque!

Failure to comply may result in fastening failure!

► Install the LED workstation light according to the chapter5 Installation .

2.6 Personal Protective Equipment

When operating the LED work lamp , personal protective equipment must be worn to minimize health risks, regardless of the application-specific risk assessment. The personal protective equipment must be specifically designed to address the relevant risk.

- ► Always wear the protective equipment required for the task at hand while working.
- ► Do not wear rings, necklaces, or other jewelry during transport, installation, disassembly, and maintenance work.
- ► Follow all instructions regarding personal protective equipment.

The symbols have the following meanings:

Symbol	Description
	**Safety shoes** Wear slip-resistant safety shoes to protect against heavy falling objects or slipping on slippery surfaces.
	**Workwear** Work safety clothing consists of close-fitting workwear with low tear resistance, tight sleeves, and no protruding parts. It is primarily designed to protect against entanglement by moving LED workstation light parts.
	**Protective gloves** Wear protective gloves to protect your hands from friction, abrasions, punctures, or deeper injuries, as well as from contact with hot surfaces or chemical substances.
	**Safety helmet** Wear a safety helmet to protect against falling or flying objects.

Personal protective equipment must be provided by the operator and must comply with applicable requirements.

In addition, national regulations, guidelines from the risk assessment for the area of operation, and, if applicable, the operator’s internal instructions must be followed.

2.7 Emergency Guidelines

Preventive Measures:

- ► Always be prepared for accidents or fires.
- ► Keep first-aid supplies (first-aid kit, blankets, etc.) and fire extinguishers within easy reach.
- ► Familiarize staff with accident reporting procedures, first aid, fire extinguishing, and rescue equipment.
- ► Keep access routes clear for emergency vehicles.

Actions to Take in Case of an Accident:

- ► Disconnect the power supply to the LED worklight.
- ► Evacuate people from the danger zone.
- ► If cardiac and/or respiratory arrest occurs, begin CPR immediately.
- ► If anyone is injured, notify the first-aid officer and call an emergency physician or the emergency medical services.
- ► Clear access routes for emergency vehicles. If necessary, assign someone to direct the emergency responders.
- ► Extinguish a fire in the electrical control system with a CO2 extinguisher.

2.8 Operator’s Responsibilities

The LED workstation light is intended for commercial use, and the operator must comply with applicable occupational safety regulations. In addition to the safety instructions in the operating manual, applicable safety regulations for the intended area of use must be observed.

The operator must ensure that the LED workstation light is used properly, that the operating instructions are available on-site, and that clear responsibilities for installation, operation, maintenance, and cleaning are established. Only qualified and trained personnel who are above the legal minimum age may perform work on the LED workstation light . Regular training, information on hazards, and the provision and use of personal protective equipment are required. The operator must ensure that persons working with the LED worklight have read and understood the operating and installation instructions . In addition, adequate virus protection and a firewall in the IT infrastructure, as well as adherence to maintenance intervals, are required. The operator must regularly check the technical condition of the device and ensure that the safety and warning notices are legible.

In addition to these operating instructions and the nationally binding accident prevention regulations, the recognized technical rules must be observed (safety and proper work practices in accordance with UVV, VBG, VDE, etc.).

3 Description of the LED Workstation Light

3.1 Functional Description

3.1.1 General Information

's LED workstation lights n AL-20-60-R / AL-20-60-RD are electronically controlled, fixed-mount LED lights designed for a wide range of applications in machines, systems, or test rigs. They are designed as permanently fixed assemblies for industrial use and are powered directly by 24 V DC. The unit features an internal aluminum profile for cooling the LEDs and a shatterproof, diffuse polycarbonate lens that ensures high glare reduction. The lights are rotatable and have a waterproof design. Optical Characteristics

- Illuminated area: Full-surface, round, diffuse illumination.
- Daylight color 5700K, light type: continuous light,
- LED lighting with high color fidelity and high contrast for good visibility in industrial environments.

3.1.2 Electrical Connection

- Power supply: Operating voltage 200–240 V AC, Class II (for the U.S./Canada)
- Connection: WIELAND RST16i3 connector
- Model AL-20-60-RD plug/receptacle and through-wiring (PE looped through)

3.1.3 Safety features

- Protection rating: IP 66 / IP67, suitable for harsh industrial environments.
- Protection class: II (protective insulation),
- General safety requirements for equipment for electric light sources

  DIN EN IEC 61347-13, DIN EN IEC 61347-2-13, Class II
- Limited surface temperature DIN EN 60598-2-24:2014-04: On all surfaces of the luminaire that are exposed to dust accumulation, the surface temperature must not exceed 90°C.
- Power supply with overload and overheating protection
- Shock- and vibration-resistant: Insensitive to mechanical impacts.
- Compliance with standards: Meets the requirements of Directive 2014/30/EU (EMC) and Directive 2011/65/EU (RoHS), including Amendment 2015/863/EU.

3.2 Typical Applications

Fixed lighting for workstations in and around machines and systems.

- Lighting in conveyor systems, packaging lines, and testing facilities.
- Parking lots, door and gate systems,

3.3 Technical Specifications

Technical Specifications AL-20-60-R / AL-20-60-RD/D	
Electrical	
Supply Voltage	220 V…240 V AC / 50–60 Hz
Current consumption	0.1 A (cosφ > 85), peak < 0.5 A
Protection Class	 Class II
Max. number of lights daisy-chained	8
Connection	AL-20-60-R WIELAND RST16i3 plug AL-20-60-R WIELAND RST16i3 plug/receptacle  wieland
Through-wiring	H07V-K 3x1.5 mm² [2] (AL-20-60-RD only) internal
Operating Mode	Continuous operation

Mechanical	
Dimensions	AL-20-60-R / AL-20-60-RD (L × W × H): 700 x 79.6 x 70.3 mm / 15.7" x 3.1" x 2.8"
Weight	1 kg
Mounting Position	Any
Mounting Method	Mounting with 2x 50 mm quick-release clamps (included)
Optical diffuser	Polycarbonate, diffusing
Housing material	Polycarbonate, polypropylene (clamp)
Protection and Environmental Conditions	
Protection Class / NEMA	IP 66 / IP67 / Type 4
Ambient Temperature	-20 °C to +40 °C
Storage Temperature	-40 °C to +70 °C
Permissible humidity	40–60% (non-condensing)
Service life (L70)	60,000 h
Meters above sea level	2,000 m
Earthquake class	Not in an earthquake zone
Chemical composition	Halogen-free, silicone-free, REACH/ROHS
Optical Data	
Light color	5700K
Color Rendering Index	>90
Energy efficiency class	E
Luminous flux	2230 lm
Ecodesign Regulation 2019/2020 EU	AL-20-60-R / EPREL Reg.-Nr.: 2049705 AL-20-60-RD / EPREL Reg.-Nr.: 2073926

3.3.1 Dimensions

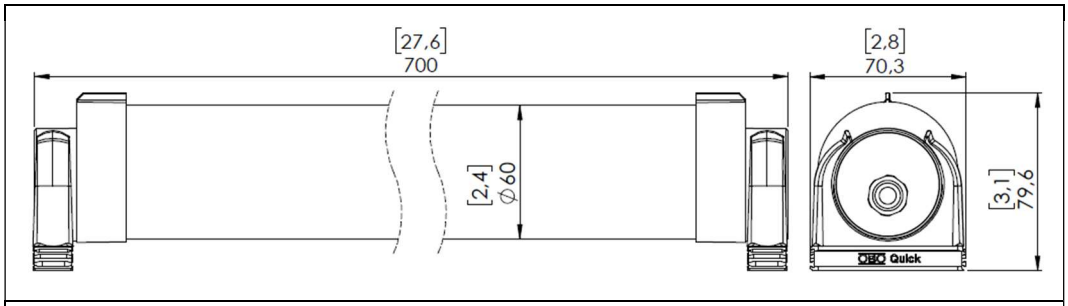

AL-20-60-R / AL-20-60-RD

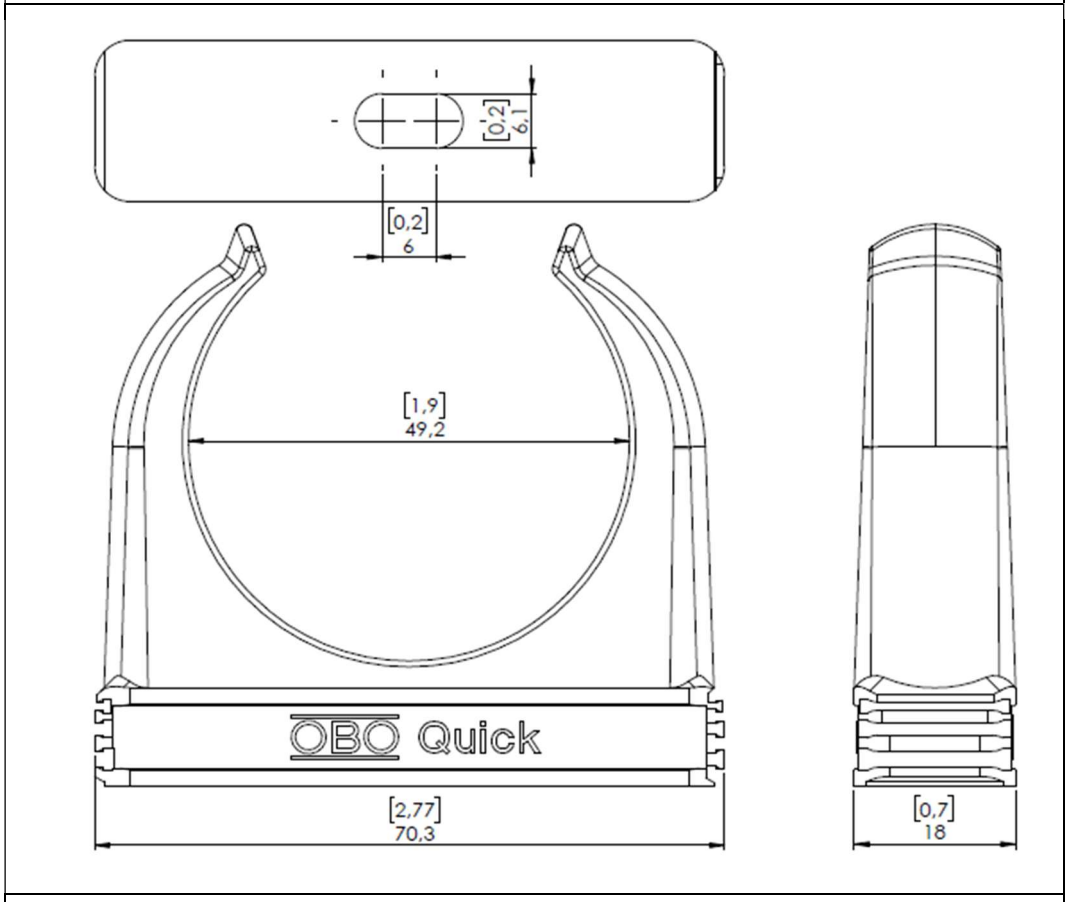

Mounting: Quick-release clamp, 50 mm

Illustration1 : Dimensions

4 Transport and Storage

4.1 Delivery by an authorized shipping carrier

The LED workstation light is delivered to the customer by a shipping carrier authorized by Schrempp electronic GmbH .

4.2 Inspection upon receipt by the recipient

Upon arrival of the LED workstation light at the customer’s location, it must be inspected for visible shipping damage.

► Report any shipping damage immediately to the delivery agent.

4.3 Packaging

The mode of transport is a key factor in determining the type of packaging. Unless otherwise agreed upon in a separate contract, the packaging complies with the HPE packaging guidelines established by the Federal Association for Wood Packaging, Pallets, and Export Packaging (Bundesverband Holzmittel, Paletten, Exportverpackung e. V.) and the Association of German Mechanical Engineering Industries (Verein Deutscher Maschinenbauanstalten).

► Please observe the symbols affixed to the packaging.

4.3.1 Unpacking

When unpacking the LED workstation light , proceed as follows:

- ► Remove the packaging. Dispose of packaging materials such as plastic film and adhesive tape properly.
- ► Always remove all packaging before installing the LED workstation light .
- ► Keep the original packaging for return or further shipping.
- ► Check the delivery against your order to ensure it is complete.
- ► Be sure to keep the included documentation; it contains important information on how to use the LED worklight .
- ► Inspect the contents of the package for visible shipping damage.
- ► If you notice any shipping damage or discrepancies between the contents of the package and your order, please notify Schrempp electronic GmbH .

4.3.2 Repackaging

See the chapter “4.3.1 Unpacking .”

4.4 Hazard warnings for transport

⚠ WARNING

The following specific hazards must be taken into account when transporting the LED workstation light:

Suspended loads may fall, posing a risk of death!

Protruding edges can cause crush injuries or cuts!



- ► Use only approved lifting attachments.
- ► Always wear the personal protective equipment required for the task at hand (workwear, protective gloves, hard hat, and safety shoes) while working.
- ► Make sure that neither you nor anyone else is standing under suspended loads.
- ► Do not use cables or attachments as tie-down points.

4.5 LED Workstation Light Package Contents

The scope of delivery for the LED workstation light consists of the following components:

- AL-20-60-R / AL-20-60-RD LED workstation light
- 2x Quick-Clamp Mount, 50 mm (1.97")
- Quick Guide
- Optional RST16I3 end cap for AL-20-60-RD (Item No.: 11315)

4.6 Temporary Storage

If the LED workstation light is not installed immediately upon delivery, it must be carefully stored in a protected location. The LED worklight must be stored temporarily in such a way that it is protected from cold, moisture, dirt, and chemical and mechanical influences. Refer to the “Environmental Conditions” section for the recommended storage conditions for the LED worklight.



We assume no liability for damage resulting from improper storage!

5 Installation

The LED worklight is designed for permanent, fixed installation in industrial settings. Installation must be performed on a suitable mounting surface and arranged so that the work area is well-lit for operating and maintenance personnel.

Inspect the LED workstation light for damage before installation. If visible damage is present, the LED workstation light must not be installed, and the manufacturer must be contacted.

5.1 Pre-assembly by Schrempp electronic GmbH

The LED workstation light is fully pre-assembled by Schrempp electronic GmbH . Connection to the machine or system is performed by the machine or system integrator.

5.2 Hazard Warnings During Installation

⚠ WARNING



Improper mounting poses a hazard!

Failure to comply may result in head, hand, or foot injuries!

- ► Secure the LED workstation light only with suitable fasteners and tighten the screws to the specified torque.
- ► Exceeding the permissible environmental conditions (temperature, humidity, vibration) can lead to failure. Check the installation location in advance.
- ► Always wear the personal protective equipment required for the task at hand (workwear, protective gloves, hard hat, and safety shoes) while working.
- ► Use fasteners in accordance with the manufacturer's instructions and tighten them to the specified torque.
- ► Do not use the LED work light as a climbing aid. Misuse may cause the LED work light to break off or be damaged in other ways.
- ► Install the LED work lamp in such a way that it cannot be used as a climbing aid.

⚠ CAUTION



Tripping hazard due to improperly routed power cords!

Failure to comply may result in injury!

- ► Always route cables so they are free of tripping hazards and obstructions.
- ► Mark unavoidable tripping hazards with color.

⚠ CAUTION

Risk of injury due to unsuitable mounting hardware!

Unsuitable mounting hardware can lead to injuries during operation!

- ► If necessary, use only the supplied mounting hardware or suitable alternatives.
- ► Screws used must be screwed into the mounting surface to a sufficient thread depth.

5.3 Preparatory Measures

5.3.1 General

Before installing the LED workstation light , ensure that:

- additional lighting equipment (e.g., flashlights) is available for installation (if necessary),
- the installation surface at the work site is clean and free of dust,
- the necessary tools for installation are available:
- Hex key for M6
- Torque wrench (adjustable)
- Screwdriver for electrical connections (qualified personnel only)

5.3.2 Preparatory Steps for Electrical Work

Before installing the LED workstation light , make sure that:

- The power supply connections are ready.
- The work area is secured and de-energized.
- The mounting position has been determined (unobstructed view, protection against damage).
- The mounting holes and M6 mounting screws of appropriate length (Chapter 5.2).
- If the AL-20-60-RD connector socket is not connected, use the optionally available RST16I3 socket cover for AL-20-60-RD (Part No.: 11315).

5.4 the LED Workstation LightInstalling

⚠ WARNING

Risk of injury due to instability!

There is a risk of serious injury due to the instability of individual components when installing the LED workstation light as a result of incorrect installation!



- ► Make sure that the mounting surface is:
  - – is flat and level
  - – has the necessary load-bearing capacity,
  - – temperature-resistant, non-flammable, and
  - – free from vibrations
  - – Surface temperature range of the mounting surface: -25°C to +60°C
  - – Ambient temperature <40°C
- ► Have installation work performed only by authorized and trained personnel.
- ► Observe the tightening torques for all screw connections during installation.
- ► Ensure that the M6 screws are of the appropriate length (Section 5.2)
- ► Always wear the protective equipment required for the task at hand (such as protective work clothing and safety shoes) while working.
- ► Avoid installing the LED worklight in locations near impermissible electromagnetic fields.
- ► Do not install the LED worklight in locations where a corrosive or explosive atmosphere is present.
- ► Note that the LED work light is intended for indoor use and protected outdoor areas only.
- ► Do not use the LED worklight in hazardous areas.
- ► Take the environmental conditions into account.
- ► Note that the LED worklight must be protected against the risk of accidental impacts.
- ► Note that, with regard to order and cleanliness, care must be taken to ensure that: all wires and cables are neatly routed and, if necessary, covered; tools in the vicinity of the LED worklight are tidied away; and loose parts and any waste (if present) are regularly removed.

5.4.1 Mechanical Mounting

Proceed as follows during installation:

- ► Align the “ in the intended position.
- ► Secure the mounting clips with 2 M6 screws of appropriate length as described in Section 5.2. (Tightening torque: 135 Nm, unless otherwise specified by the manufacturer).
- ► Press the light into the mounting clips without tilting it.
- ► Check that the light is securely fastened (no play, no twisting). Do not install lights closer than 15.25 cm from curtains or similar flammable materials.

5.4.2 Electrical Connection

- ► Plug in and fully lock the connection.
- ► Check the pin assignment according to the technical documentation.
- ► Use only the WIELAND RST16-3 connector system
- ► Observe the maximum number of daisy-chained AL-20-60-RD lights
- ► The last luminaire in the chain must be an AL-20-60-R without a looped-through second connector, or the AL-20-60-RD connector socket must be fitted with an optionally available end cap (Part No.: 11315 End Cap RST16I3 Socket).

5.4.3 Installation Instructions

- ► Ensure direct visibility within the intended observation area and rotate the luminaire to the desired position.
- ► Avoid installation locations with strong ambient light or direct sunlight.
- ► Protect the light from mechanical impacts, vibrations, and chemical exposure.

6 Commissioning

6.1 Safety Precautions Before Commissioning

⚠ WARNING



Risk of injury during commissioning!

There are various risks of injury during commissioning.

- ► Have commissioning performed only by qualified personnel.
- ► Cordon off the hazard area and keep unauthorized persons away.
- ► Route power supply lines so they are free of tripping hazards and obstructions (e.g., under covers).

► Familiarize yourself thoroughly with:

- the features of the LED workstation light ,
- the operation of the LED worklight ,
- the emergency procedures.

► Before initial startup, perform the following steps:

► Inspect the LED worklight for visible damage; correct any defects found immediately—the LED worklight must only be operated when in perfect condition.

6.2 Connection AL-20-60-R / AL-20-60-RD

AL-10-60 R	**RST16i3 plug**
AL-10-60 RD	**RST16i3 plug/socket**
	PE looped through

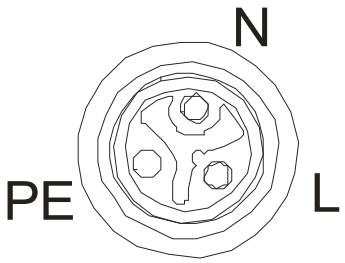

wieland

7 Troubleshooting

⚠ WARNING



The " " ( ) poses hazards during troubleshooting!

Failure to follow these instructions may result in damage, malfunction, or total failure of the , as well as compromised safety of the LED worklight !

► Have repairs performed only by qualified personnel.

7.1 Remedial Measures

Malfunction	Cause	Remedy
LED workstation light not functioning	No power supply	Check the power supply and turn it on
	Plug not connected correctly	Check and secure the plug connections
	Defective power supply	Replace the power supply according to specifications
LED workstation light is not illuminated	Error in the control system or wiring	Check the wiring and correct it if necessary
LED workstation light flashes or flickers unintentionally	Voltage fluctuations	Stabilize the power supply
	Loose connection in the power cord or connector	Check connectors and cables
Lighting surface is unevenly bright	Defective LEDs	Replace the device

8 Main s and Cleaning

8.1 Safety Precautions During Maintenance Work

8.1.1 General safety precautions for maintenance work

Perform the required maintenance tasks, such as cleaning and inspections, on schedule. Read the chapter “2 Safety .”

- ► Restrict access to the operating area of the . Ensure that only authorized persons are present in the operating area of the .
- ► Replace any defective LED work lights and accessories immediately.
- ► Use only genuine accessories and replacement parts. The use of other parts will void the warranty and the product’s suitability for use and may result in injury.

After completing maintenance work and before using the LED worklight , perform the following steps:

- ► Check all previously loosened screw connections again to ensure they are tight.
- ► Check to make sure that all previously removed protective devices, covers, housing lids , and, if applicable, other components have been properly reinstalled.
- ► Ensure that all tools, materials, and other equipment used have been removed from the work area.
- ► Clean the work area.

Modifications, alterations, improper or unauthorized use, and failure to follow the instructions in this operating manual void the warranty.

8.2 Inspection and Maintenance

8.2.1 Maintenance Intervals

Maintenance Location	Maintenance task	See section
Monthly		
LED workstation light	Visual inspection for damage, secure fit, and dirt.	8.2.3
LED workstation light	Functional test	
Annually		
LED workstation light	Inspection of electrical connections, mounting screws, and seals.	8.2.44

8.2.2 Preparatory Measures: Electrical System

DANGER



Risk of death from electric shock!

Live components can cause a fatal electric shock or serious injury if touched!

- ► Have work on the electrical equipment performed only by a qualified electrician who is specifically trained to work on electrical equipment and can identify and avoid hazards.
- ► Before performing maintenance or inspection work on the LED worklight or the LED worklight , ensure the unit is de-energized.
- ► Secure the LED worklight against accidental restarting by locking the main switch with a padlock.
- ► Attach a warning sign against accidental restarting to the main switch.

NOTE



► Use ESD protection measures during maintenance (e.g., grounding wrist strap, conductive work mat).

8.2.3 Maintenance - Monthly

8.2.3.1 Visual inspection

► Check the light-emitting surface for scratches, cracks, or cloudiness.

► Check that the light fixture is securely fastened (no play, no twisting).

► Inspect cables and connectors for damage, corrosion, or loose connections.

8.2.3.2 Cleaning

► Use a soft, lint-free cloth.

► Clean the light-emitting surface with a mild, non-abrasive cleaner.

► Avoid aggressive solvents (e.g., acetone, gasoline, concentrated acids, chloroform), which can damage the diffuser.

► Make sure no moisture enters the housing.

8.2.3.3 Functional Test

► Restore the power supply.

► Activate all lighting functions one after another.

► Check to see if colors are displayed correctly.

► Document any abnormalities in the maintenance log.

8.2.4 Maintenance—annually

8.2.4.1 Electrical Inspection

⚠ DANGER



Risk of death from electric shock!

Live components can cause a fatal electric shock or serious injury if touched!

► Have work on the electrical equipment performed only by a qualified electrician.

► Before performing any maintenance or inspection work, disconnect the LED worklight from the power source.

► Check all connectors to ensure they are securely seated and locked in place.

► Inspect the cables for chafing or crushing.

► If necessary, tighten the terminal mounting screws (to the torque specified by the manufacturer).

8.2.5 Replacement of Components

► The light source in this lamp is not replaceable; if the light source has reached the end of its service life or is defective, the entire lamp must be replaced.

9 Taking Out of Service and Disassembly

⚠ WARNING



Risk of serious injury due to improper decommissioning or disposal of the LED workstation light!

Failure to comply can result in serious injury!

► Have all work on the electrical system performed only by qualified electricians. Qualified electricians are specially trained to work on electrical systems, are aware of the dangers of electrical voltage, and can independently avoid potential hazards by taking the proper precautions.

► Have the LED workstation light disassembled exclusively by qualified or appropriately trained personnel who have experience disassembling electrical equipment.

► Completely turn off the LED worklight before beginning any disassembly work and disconnect it from the power supply at all terminals.

► Always wear the required personal protective equipment during work, such as protective work clothing, safety shoes, protective gloves, and a hard hat.

► If in doubt, contact Schrempp electronic GmbH for technical support or guidance on safe decommissioning and disposal.

9.1 Disposal

⚠ WARNING

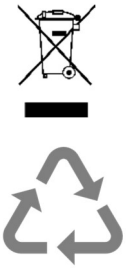

Risk of environmental pollution/waste of resources!

Failure to comply may result in environmental damage!

- ► Have disposal work performed only by trained and authorized personnel.
- ► Separate electrical and electronic components in accordance with Directive 2012/19/EU. Sort materials and packaging waste by type and send them for recycling. Recycle materials marked with a recycling symbol. The packaging is made of various materials that can be disposed of through your local recycling facility. By properly disposing of the packaging, you help prevent potential hazards to the environment and public health.
- ► Follow local recycling regulations.

10 Appendix

10.1 EU Declaration of Conformity

On the following pages, you will find the EU Declaration of Conformity for the LED workstation light and the attached documents.

EU Declaration of Conformity

(Original Declaration of Conformity)

Manufacturer/Authorized Representative:	Schrempp electronic GmbH , Wiesenstrasse 5, , D-65843 Sulzbach/Ts.
Authorized representative responsible for compiling the technical documentation:	Schrempp electronic GmbH , Wiesenstrasse 5, , D-65843 Sulzbach/Ts.
Product:	AL-20-60-R / 11124 / GTIN 4262388141614 AL-20-60-RD: 11126 / GTIN 4262388141621
Function:	The workstation lamp is intended exclusively for illuminating industrial machines, equipment, or systems

The manufacturer bears sole responsibility for issuing this Declaration of Conformity. The subject matter of the declaration described above complies with the relevant Union harmonization legislation, depending on the components used, as described in the annexes to the Directives, which form an integral part of this Declaration of Conformity:

- 2014/30/EU – EMC Directive, including the essential requirements set forth in Annex I
- 2011/65/EU + (EU) 2015/863 – EU RoHS Directive, including the essential requirements set forth in Annex II

These products comply with the current requirements of the RoHS Directive for all 10 specified substances (max. 0.1% by weight in homogeneous material for lead, mercury, hexavalent chromium (Cr6+), polybrominated biphenyl (PBB), polybrominated diphenyl ether (PBDE), di(2-ethylhexyl) phthalate (DEHP), butylbenzyl phthalate (BBP), dibutyl phthalate (DBP), and diisobutyl phthalate (DIBP), and a maximum of 0.01% by weight for cadmium).

Specification of the relevant harmonized standards (or parts thereof) on which the product is based, including the date of the standard, or specification of other technical specifications for which conformity is declared, including the date of the specification:

- DIN EN 60598-1/A11: 2021
- DIN EN 60598-2-24:2014-04
- DIN EN 55015: +A11: 2020
- DIN EN 61547: 2023
- DIN EN 61347-1 / DIN EN 61347-2-13
- DIN EN 62471: 2009
- DIN EN 60529
- EN IEC 63000:2018

D-65843 Sulzbach/Ts. ,12.11.2026

Wolfram Schrempp, M.Eng., Managing Director